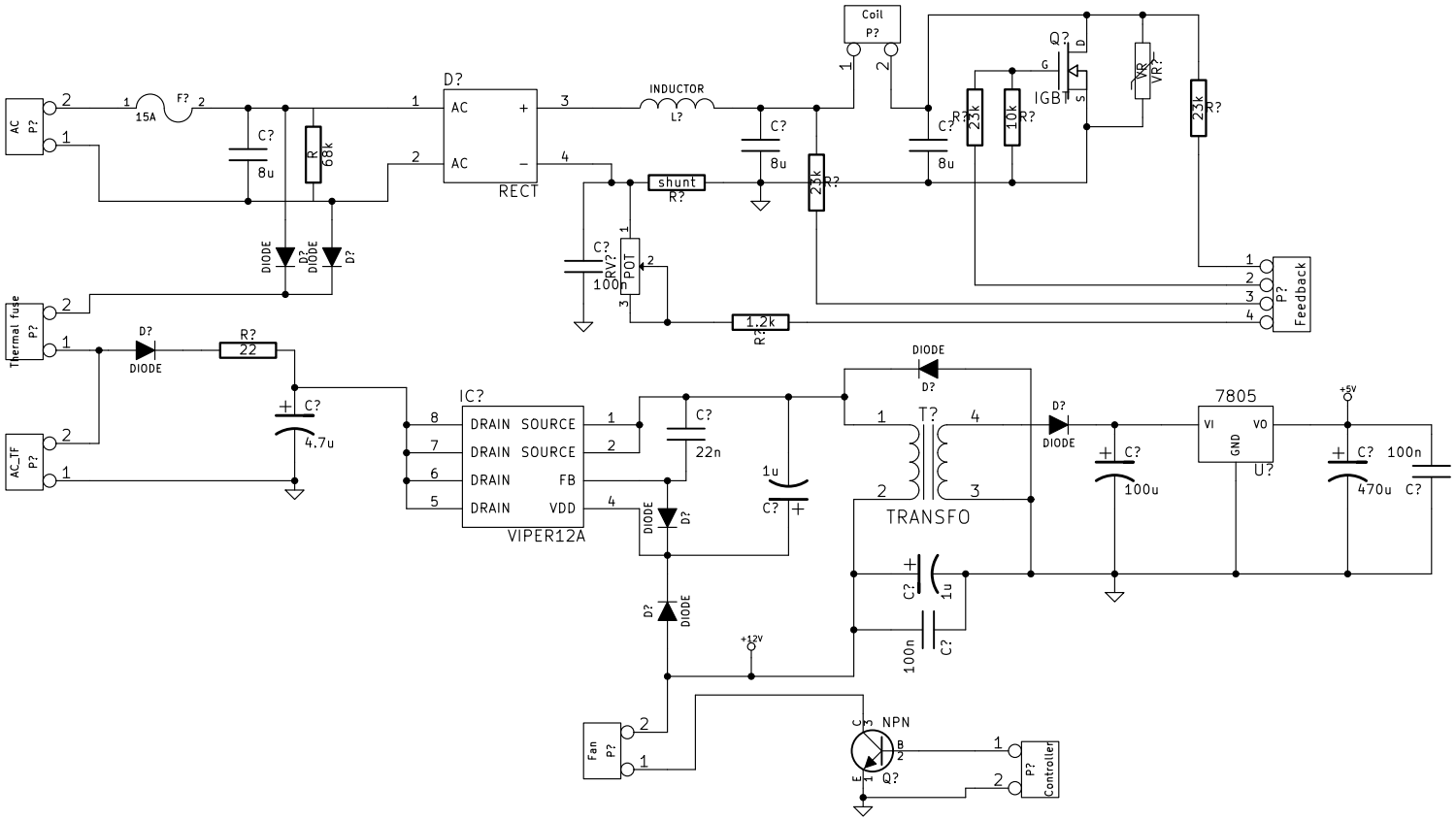

File: induction_cooker_reverse_engineered.sch
Sheet: /
Title:
Size: A4 | **Date: 22 feb 2011** | **Rev:**
KiCad E.D.A. | Id: 1/1